COPLANAR WAVEGUIDE CIRCUITS, COMPONENTS, AND SYSTEMS

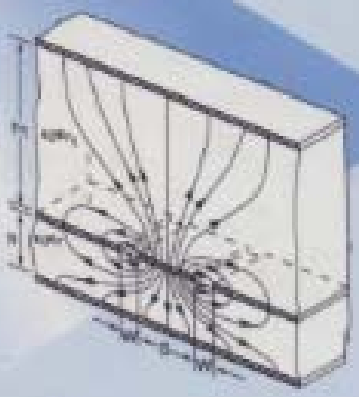

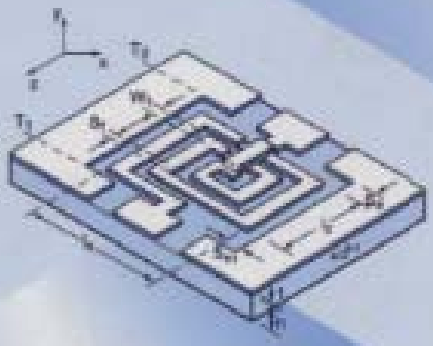

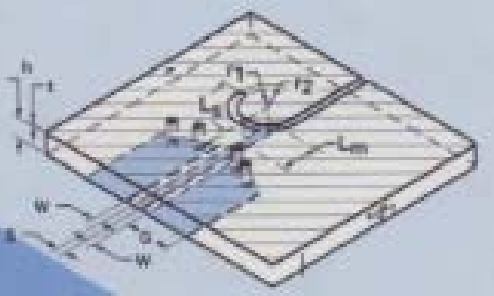

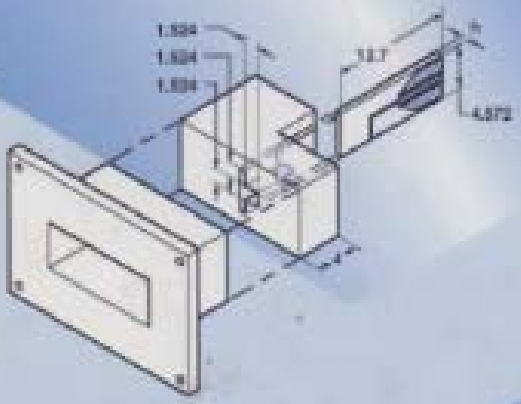

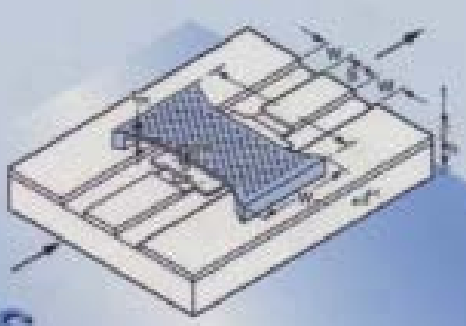

RAINEE N. SIMONS

Wiley Series in Microwave and Optical Engineering
Kai Chang, Series Editor

Contents

Preface ix

1 Introduction 1

1.1 Advantages of Coplanar Waveguide Circuits 1

1.1.1 Design 1

1.1.2 Manufacturing 2

1.1.3 Performance 2

1.2 Types of Coplanar Waveguides 3

1.3 Software Tools for Coplanar Waveguide Circuit Simulation 4

1.4 Typical Applications of Coplanar Waveguides 4

1.4.1 Amplifiers, Active Combiners, Frequency Doublers, Mixers, and Switches 4

1.4.2 Microelectromechanical Systems (MEMS) Metal Membrane Capacitive Switches 4

1.4.3 Thin Film High-Temperature Superconducting/ Ferroelectric Tunable Circuits and Components 5

1.4.4 Photonic Bandgap Structures 5

1.4.5 Printed Antennas 5

1.5 Organization of This Book 6

References 7

2 Conventional Coplanar Waveguide 11

2.1 Introduction 11

2.2 Conventional Coplanar Waveguide on a Multilayer Dielectric Substrate 12

2.2.1 Analytical Expression Based on Quasi-static Conformal Mapping Techniques to Determine Effective Dielectric Constant and Characteristic Impedance 12
2.2.2 Conventional Coplanar Waveguide on an Infinitely Thick Dielectric Substrate 17
2.2.3 Conventional Coplanar Waveguide on a Dielectric Substrate of Finite Thickness 20
2.2.4 Conventional Coplanar Waveguide on a Finite Thickness Dielectric Substrate and with a Top Metal Cover 21
2.2.5 Conventional Coplanar Waveguide Sandwiched between Two Dielectric Substrates 24
2.2.6 Conventional Coplanar Waveguide on a Double-Layer Dielectric Substrate 25
2.2.7 Experimental Validation 29
2.3 Quasi-static TEM Iterative Techniques to Determine ε_{eff} and Z_0 32
2.3.1 Relaxation Method 32
2.3.2 Hybrid Method 33
2.4 Frequency-Dependent Techniques for Dispersion and Characteristic Impedance 33
2.4.1 Spectral Domain Method 33
2.4.2 Experimental Validation 44
2.5 Empirical Formula to Determine Dispersion Based on Spectral Domain Results 47
2.5.1 Comparison of Coplanar Waveguide Dispersion with Microstrip 48
2.6 Synthesis Formulas to Determine ε_{eff} and Z_0 Based on Quasi-static Equations 49
2.7 Coplanar Waveguide with Elevated or Buried Center Strip Conductor 52
2.7.1 CPW with Elevated Center Strip Conductor Supported on Dielectric Layers 54
2.7.2 CPW with Elevated Center Strip Conductor Supported on Posts 54
2.8 Coplanar Waveguide with Ground Plane or Center Strip Conductor Underpasses 56
2.9 Coplanar Waveguide Field Components 56

2.10 Coplanar Waveguide on a Cylindrical Surface 63
2.10.1 Analytical Expressions Based on Quasi-static Conformal Mapping Technique 63
2.10.2 Computed Effective Dielectric Constant and Characteristic Impedance 67
2.11 Effect of Metalization Thickness on Coplanar Waveguide Characteristics 67
Appendix 2A: Spectral Domain Dyadic Green's Function Components 69
Appendix 2B: Time Average Power Flow in the Three Spatial Regions 77
References 83

3 Conductor-Backed Coplanar Waveguide 87
3.1 Introduction 87
3.2 Conductor-Backed Coplanar Waveguide on a Dielectric Substrate of Finite Thickness 88
3.2.1 Analytical Expressions Based on Quasi-static TEM Conformal Mapping Technique to Determine Effective Dielectric Constant and Characteristic Impedance 88
3.2.2 Experimental Validation 89
3.2.3 Analytical Expressions for CBCPW ε_{eff} and Z_0 in the Presence of a Top Metal Cover 93
3.2.4 Dispersion and Characteristic Impedance from Full-Wave Analysis 96
3.3 Effect of Conducting Lateral Walls on the Dominant Mode Propagation Characteristics of CBCPW and Closed Form Equations for Z_0 98
3.3.1 Experimental Validation 101
3.4 Effect of Lateral Walls on the Higher-Order Mode Propagation on CBCPW 102
3.4.1 Perfect Conductors and Lossless Dielectric 102
3.4.2 Conductors with Finite Thickness, Finite Conductivity, and Lossless or Lossy Dielectric 104
3.4.3 Experimental Validation 107
3.5 Channelized Coplanar Waveguide 107
3.6 Realization of Lateral Walls in Practical Circuits 108
References 109

4 Coplanar Waveguide with Finite-Width Ground Planes 112

4.1 Introduction 112

4.2 Conventional Coplanar Waveguide with Finite-Width Ground Planes on a Dielectric Substrate of Finite Thickness 113

4.2.1 Analytical Expressions Based on Quasi-static TEM Conformal Mapping Techniques to Determine Effective Dielectric Constant and Characteristic Impedance 113

4.2.2 Dispersion and Characteristic Impedance from Full-Wave Analysis 117

4.3 Conductor-Backed Coplanar Waveguide with Finite-Width Ground Planes on a Dielectric Substrate of Finite Thickness and Finite Width 119

4.4 Simple Models to Estimate Finite Ground Plane Resonance in Conductor-Backed Coplanar Waveguide 123

4.4.1 Experimental Validation 124

References 125

5 Coplanar Waveguide Suspended inside a Conducting Enclosure 127

5.1 Introduction 127

5.2 Quasi-static TEM Iterative Technique to Determine ε_{eff} and Z_0 of Suspended CPW 128

5.2.1 Computed Quasi-static Characteristics and Experimental Validation 128

5.3 Frequency-Dependent Numerical Techniques for Dispersion and Characteristic Impedance of Suspended CPW 132

5.3.1 Effect of Shielding on the Dispersion and Characteristic Impedance 133

5.3.2 Experimental Validation of Dispersion 135

5.3.3 Effect of Conductor Thickness on the Dispersion and Characteristic Impedance 135

5.3.4 Modal Bandwidth of a Suspended CPW 136

5.3.5 Pulse Propagation on a Suspended CPW 140

5.3.6 Pulse Distortion—Experimental Validation 142

5.4 Dispersion and Higher-Order Modes of a Shielded Grounded CPW 142

5.5 Dispersion, Characteristic Impedance, and Higher-Order

Modes of a CPW Suspended inside a Nonsymmetrical Shielding Enclosure 143
5.5.1 Experimental Validation of the Dispersion Characteristics 146
5.6 Dispersion and Characteristic Impedance of Suspended CPW on Multilayer Dielectric Substrate 147
References 150

6 Coplanar Striplines 152
6.1 Introduction 152
6.2 Analytical Expressions Based on Quasi-Static TEM Conformal Mapping Techniques to Determine Effective Dielectric Constant and Characteristic Impedance 153
6.2.1 Coplanar Stripline on a Multilayer Dielectric Substrate 153
6.2.2 Coplanar Stripline on a Dielectric Substrate of Finite Thickness 155
6.2.3 Asymmetric Coplanar Stripline on a Dielectric Substrate of Finite Thickness 157
6.2.4 Coplanar Stripline with Infinitely Wide Ground Plane on a Dielectric Substrate of Finite Thickness 160
6.2.5 Coplanar Stripline with Isolating Ground Planes on a Dielectric Substrate of Finite Thickness 161
6.3 Coplanar Stripline Synthesis Formulas to Determine the Slot Width and the Strip Conductor Width 162
6.4 Novel Variants of the Coplanar Stripline 164
6.4.1 Micro-coplanar Stripline 164
6.4.2 Coplanar Stripline with a Groove 164
References 169

7 Microshield Lines and Coupled Coplanar Waveguide 171
7.1 Introduction 171
7.2 Microshield Lines 171
7.2.1 Rectangular Shaped Microshield Line 173
7.2.2 V-Shaped Microshield Line 176
7.2.3 Elliptic Shaped Microshield Line 180
7.2.4 Circular Shaped Microshield Line 180
7.3 Edge Coupled Coplanar Waveguide without a Lower Ground Plane 182

7.3.1 Even Mode 182
7.3.2 Odd Mode 186
7.3.3 Computed Even- and Odd-Mode Characteristic Impedance and Coupling Coefficient 189

7.4 Conductor-Backed Edge Coupled Coplanar Waveguide 190
7.4.1 Even Mode 192
7.4.2 Odd Mode 192
7.4.3 Even- and Odd-Mode Characteristics with Elevated Strip Conductors 193

7.5 Broadside Coupled Coplanar Waveguide 193
7.5.1 Even Mode 194
7.5.2 Odd Mode 197
7.5.3 Computed Even- and Odd-Mode Effective Dielectric Constant, Characteristic Impedance, Coupling Coefficient, and Mode Velocity Ratio 198

References 201

8 Attenuation Characteristics of Conventional, Micromachined, and Superconducting Coplanar Waveguides 203

8.1 Introduction 203

8.2 Closed Form Equations for Conventional CPW Attenuation Constant 204
8.2.1 Conformal Mapping Method 205
8.2.2 Mode-Matching Method and Quasi-TEM Model 207
8.2.3 Matched Asymptotic Technique and Closed Form Expressions 207
8.2.4 Measurement-Based Design Equations 212
8.2.5 Accuracy of Closed Form Equations 215

8.3 Influence of Geometry on Coplanar Waveguide Attenuation 217
8.3.1 Attenuation Constant Independent of the Substrate Thickness and Dielectric Constant 217
8.3.2 Attenuation Constant Dependent on the Aspect Ratio 217
8.3.3 Attenuation Constant Varying with the Elevation of the Center Strip Conductor 218

8.4 Attenuation Characteristics of Coplanar Waveguide on Silicon Wafer 218
8.4.1 High-Resistivity Silicon Wafer 218
8.4.2 Low-Resistivity Silicon Wafer 221

8.5 Attenuation Characteristics of Coplanar Waveguide on Micromachined Silicon Wafer 221
8.5.1 Microshield Line 221
8.5.2 Coplanar Waveguide with V-Shaped Grooves 223
8.5.3 Coplanar Waveguide Suspended by a Silicon Dioxide Membrane over a Micromachined Wafer 223
8.6 Attenuation Constant for Superconducting Coplanar Waveguides 225
8.6.1 Stopping Distance 225
8.6.2 Closed Form Equations 230
8.6.3 Comparison with Numerical Calculations and Measured Results 233
References 233

9 Coplanar Waveguide Discontinuities and Circuit Elements 237
9.1 Introduction 237
9.2 Coplanar Waveguide Open Circuit 237
9.2.1 Approximate Formula for Length Extension When the Gap Is Large 239
9.2.2 Closed Form Equation for Open End Capacitance When the Gap Is Narrow 239
9.2.3 Radiation Loss 240
9.2.4 Effect of Conductor Thickness and Edge Profile Angle 241
9.3 Coplanar Waveguide Short Circuit 241
9.3.1 Approximate Formula for Length Extension 241
9.3.2 Closed Form Equations for Short-Circuit Inductance 242
9.3.3 Effect of Conductor Thickness and Edge Profile Angle 243
9.4 Coplanar Waveguide MIM Short Circuit 243
9.5 Series Gap in the Center Strip Conductor of a Coplanar Waveguide 245
9.6 Step Change in the Width of Center Strip Conductor of a Coplanar Waveguide 245
9.7 Coplanar Waveguide Right Angle Bend 247
9.8 Air-Bridges in Coplanar Waveguide 249
9.8.1 Type A Air-Bridge 250
9.8.2 Type B Air-Bridge 250
9.8.3 Air-Bridge Characteristics 250

9.8.4 Air-Bridge Discontinuity Characteristics 254

9.9 Coplanar Waveguide T-Junction 254
9.9.1 Conventional T-Junction 254
9.9.2 Air-Bridge T-Junction 259
9.9.3 Mode Conversion in CPW T-Junction 260
9.9.4 CPW T-Junction Characteristics 261

9.10 Coplanar Waveguide Spiral Inductor 262

9.11 Coplanar Waveguide Capacitors 265
9.11.1 Interdigital Capacitor 266
9.11.2 Series Metal-Insulator-Metal Capacitor 269
9.11.3 Parallel Metal-Insulator-Metal Capacitor 270
9.11.4 Comparison between Coplanar Waveguide Interdigital and Metal-Insulator-Metal Capacitors 271

9.12 Coplanar Waveguide Stubs 272
9.12.1 Open-End Coplanar Waveguide Series Stub 273
9.12.2 Short-End Coplanar Waveguide Series Stub 275
9.12.3 Combined Short- and Open End Coplanar Waveguide Series Stubs 278
9.12.4 Coplanar Waveguide Shunt Stubs 278
9.12.5 Coplanar Waveguide Radial Line Stub 278

9.13 Coplanar Waveguide Shunt Inductor 282

References 285

10 Coplanar Waveguide Transitions 288

10.1 Introduction 288

10.2 Coplanar Waveguide-to-Microstrip Transition 289
10.2.1 Coplanar Waveguide-to-Microstrip Transition Using Ribbon Bond 289
10.2.2 Coplanar Waveguide-to-Microstrip Surface-to-Surface Transition via Electromagnetic Coupling 290
10.2.3 Coplanar Waveguide-to-Microstrip Transition via a Phase-Shifting Network 292
10.2.4 Coplanar Waveguide-to-Microstrip Transition via a Metal Post 292
10.2.5 Coplanar Waveguide-to-Microstrip Transition Using a Via-Hole Interconnect 294

10.2.6 Coplanar Waveguide-to-Microstrip Orthogonal Transition via Direct Connection 296

10.3 Transitions for Coplanar Waveguide Wafer probes 298

10.3.1 Coplanar Waveguide Wafer Probe-to-Microstrip Transitions Using a Radial Stub 298

10.3.2 Coplanar Waveguide Wafer Probe-to-Microstrip Transition Using Metal Vias 299

10.4 Transitions between Coplanar Waveguides 300

10.4.1 Grounded Coplanar Waveguide-to-Microshield Coplanar Line 300

10.4.2 Vertical Fed-through Interconnect between Coplanar Waveguides with Finite-Width Ground Planes 301

10.4.3 Orthogonal Transition between Coplanar Waveguides 302

10.4.4 Electromagnetically Coupled Transition between Stacked Coplanar Waveguides 303

10.4.5 Electromagnetically Coupled Transition between Orthogonal Coplanar Waveguides 304

10.5 Coplanar Waveguide-to-Rectangular Waveguide Transition 306

10.5.1 Coplanar Waveguide-to-Ridge Waveguide In-line Transition 306

10.5.2 Coplanar Waveguide-to-Trough Waveguide Transition 308

10.5.3 Coplanar Waveguide-to-Rectangular Waveguide Transition with a Tapered Ridge 313

10.5.4 Coplanar Waveguide-to-Rectangular Waveguide End Launcher 314

10.5.5 Coplanar Waveguide-to-Rectangular Waveguide Launcher with a Post 315

10.5.6 Channelized Coplanar Waveguide-to-Rectangular Waveguide Launcher with an Aperture 317

10.5.7 Coplanar Waveguide-to-Rectangular Waveguide Transition with a Printed Probe 318

10.6 Coplanar Waveguide-to-Slotline Transition 318

10.6.1 Coplanar Waveguide-to-Slotline Compensated Marchand Balun or Transition 319

10.6.2 Coplanar Waveguide-to-Slotline Transition with Radial or Circular Stub Termination 321

11.3.4 Reduced Size Impedance Transforming Branch-Line Hybrid 358

11.4 180° Hybrid 361

11.4.1 Standard 180° Ring Hybrid 363

11.4.2 Size Reduction Procedure for 180° Ring Hybrid 364

11.4.3 Reduced Size 180° Ring Hybrid 364

11.4.4 Reverse-Phase 180° Ring Hybrid 368

11.4.5 Reduced Size Reverse-Phase 180° Ring Hybrid 369

11.5 Standard 3-dB Magic-T 371

11.5.1 Reduced Size 3-dB Magic-T 375

11.6 Active Magic-T 378

References 383

12 Coplanar Waveguide Applications 384

12.1 Introduction 384

12.2 MEMS Coplanar Waveguide Capacitive Metal Membrane Shunt Switch 384

12.2.1 OFF and ON Capacitances 384

12.2.2 Figure of Merit 386

12.2.3 Pull Down Voltage 387

12.2.4 Fabrication Process 389

12.2.5 Switching Time and Switching Energy 391

12.2.6 Insertion Loss and Isolation 391

12.3 MEMS Coplanar Waveguide Distributed Phase Shifter 393

12.3.1 MEMS Air-Bridge Capacitance 395

12.3.2 Fabrication and Measured Performance 397

12.4 High-Temperature Superconducting Coplanar Waveguide Circuits 398

12.4.1 High-Frequency Electrical Properties of Normal Metal Films 398

12.4.2 High-Frequency Electrical Properties of Epitaxial High-T_c Superconducting Films 399

12.4.3 Kinetic and External Inductances of a Superconducting Coplanar Waveguide 401

12.4.4 Resonant Frequency and Unloaded Quality Factor 402

12.4.5 Surface Resistance of High-T_c Superconducting Coplanar Waveguide 407

10.6.3 Coplanar Waveguide-to-Slotline Double-Y Balun or Transition 323
10.6.4 Electromagnetically Coupled Finite-Width Coplanar Waveguide-to-Slotline Transition with Notches in the Ground Plane 327
10.6.5 Electromagnetically Coupled Finite-Width Coplanar Waveguide-to-Slotline Transition with Extended Center Strip Conductor 328
10.6.6 Air-Bridge Coupled Coplanar Waveguide-to-Slotline Transition 329

10.7 Coplanar Waveguide-to-Coplanar Stripline Transition 331
10.7.1 Coplanar Stripline-to-Coplanar Waveguide Balun 331
10.7.2 Coplanar Stripline-to-Coplanar Waveguide Balun with Slotline Radial Stub 332
10.7.3 Coplanar Stripline-to-Coplanar Waveguide Double-Y Balun 333

10.8 Coplanar Stripline-to-Microstrip Transition 334
10.8.1 Coplanar Stripline-to-Microstrip Transition with an Electromagnetically Coupled Radial Stub 334
10.8.2 Uniplanar Coplanar Stripline-to-Microstrip Transition 336
10.8.3 Coplanar Stripline-to-Microstrip Transition 337
10.8.4 Micro-coplanar Stripline-to-Microstrip Transition 338

10.9 Coplanar Stripline-to-Slotline Transition 339

10.10 Coplanar Waveguide-to-Balanced Stripline Transition 342

References 342

11 Directional Couplers, Hybrids, and Magic-Ts 346

11.1 Introduction 346

11.2 Coupled-Line Directional Couplers 346
11.2.1 Edge Coupled CPW Directional Couplers 349
11.2.2 Edge Coupled Grounded CPW Directional Couplers 350
11.2.3 Broadside Coupled CPW Directional Coupler 351

11.3 Quadrature (90°) Hybrid 352
11.3.1 Standard 3-dB Branch-Line Hybrid 354
11.3.2 Size Reduction Procedure for Branch-Line Hybrid 355
11.3.3 Reduced Size 3-dB Branch-Line Hybrid 356

12.4.6 Attenuation Constant 409

12.5 Ferroelectric Coplanar Waveguide Circuits 410

12.5.1 Characteristics of Barium Strontium Titanate Thin Films 410

12.5.2 Characteristics of Strontium Titanate Thin Films 413

12.5.3 Grounded Coplanar Waveguide Phase Shifter 414

12.6 Coplanar Photonic-Bandgap Structure 417

12.6.1 Nonleaky Conductor-Backed Coplanar Waveguide 417

12.7 Coplanar Waveguide Patch Antennas 422

12.7.1 Grounded Coplanar Waveguide Patch Antenna 422

12.7.2 Patch Antenna with Electromagnetically Coupled Coplanar Waveguide Feed 424

12.7.3 Coplanar Waveguide Aperture-Coupled Patch Antenna 425

References 430

Index 434